BDW1W/SS

DISHWASHER

Instruction manual

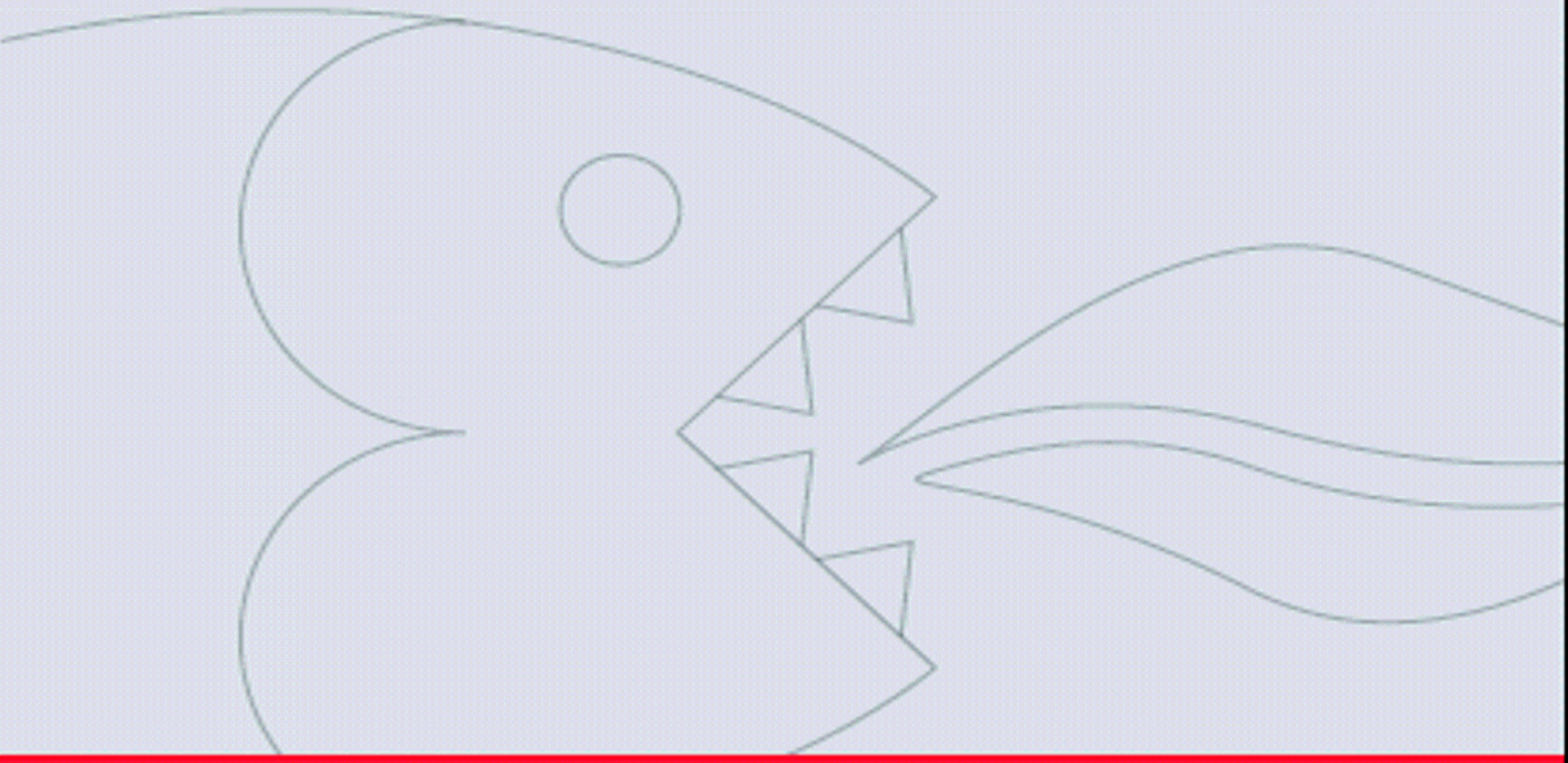

Baumatic®

IMPORTANT!
PLEASE READ THIS MANUAL AND KEEP IT FOR FUTURE REFERENCE!
THIS MANUAL CONTAINS SECTIONS OF **SAFETY INSTRUCTIONS**, **OPERATING INSTRUCTIONS** & **TROUBLESHOOTING TIPS**, **ETC.**

BAUMATIC

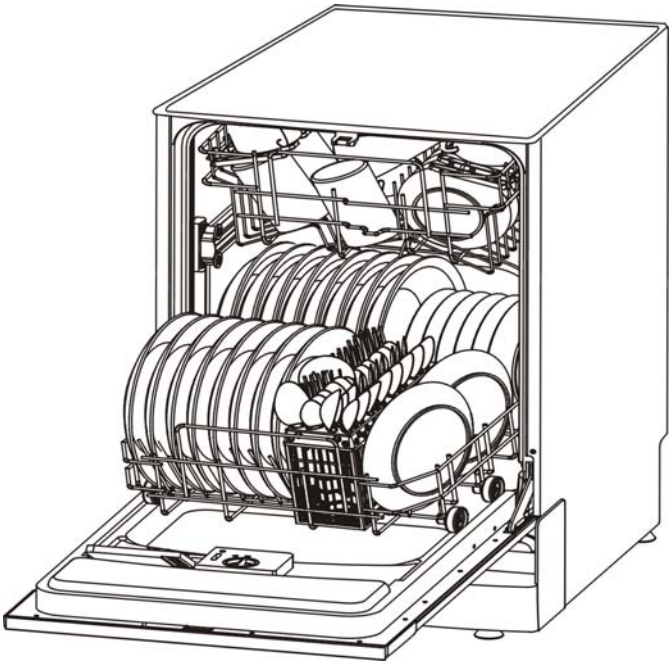

BDW1W/SS – DISHWASHER

60CM FULL HEIGHT DISHWASHER

INSTRUCTION MANUAL

CAREFULLY READING IT BEFORE USING THE DISHWASHER WILL HELP YOU USE AND MAINTAIN THE DISHWASHER PROPERLY.

BEFORE CALLING FOR SERVICE

REVIEWING THE SECTION ON TROUBLESHOOTING TIPS WILL HELP YOU SOLVE SOME COMMON PROBLEMS WITHOUT THE NEED TO ASK FOR HELP FROM PROFESSIONAL TECHNICIANS.

PLEASE NOTE:
THE MANUFACTURER RESERVES THE RIGHT TO MAKE MODIFICATIONS TO PRODUCTS WITHOUT GIVING PRIOR NOTICE.

CONTENTS

- ***SAFETY FIRST!***

SAFETY INFORMATION ……3
Please read this before using your dishwasher!

- ***KNOWING YOUR DISHWASHER***

CONTROL PANEL ……4
DISHWASHER FEATURES ……4

- ***USING YOUR DISHWASHER***

WATER SOFTENER ……5-6
DETERGENT ……6
RINSE AID ……7
LOADING YOUR DISHWASHER……8-11
STARTING A WASH CYCLE ……12-14
UNLOADING AT THE END OF A CYCLE……14
FILTERING SYSTEM ……15
CLEANING AND MAINTAINING YOUR DISHWASHER ……15-17

- ***BEFORE YOU CALL FOR SERVICE...***

TROUBLESHOOTING ……18-21
ERROR CODES ……22

- ***MISCELLANEOUS***

CHARACTERISTICS ……23
HOW TO INSTALL ……24-29
FINAL CHECKLIST BEFORE STARTING……29
CONDITIONS OF GUARANTEE……30
CONTACT DETAILS……31

IMPORTANT SAFETY INFORMATION

⚠ WARNING! READ BEFORE USING!

⚠ WARNING! HYDROGEN GAS IS EXPLOSIVE

Under certain conditions, Hydrogen gas may be produced in a hot–water system that has not been used for two weeks or more. HYDROGEN GAS IS EXPLOSIVE.
If the hot–water system has not been used for such a period, before using the dishwasher turn on all hot–water faucets and let the water flow from each for several minutes. This will release any accumulated hydrogen gas. As the gas is flammable, do not smoke or use an open flame during this time.

ELECTRICAL SAFETY

CE This appliance complies with Directives 89/336/EEC, 73/23/EEC and following changes.

- **NOTE - This appliance must be grounded. In the event of a malfunction or breakdown, grounding will reduce the risk of electric shock by providing a path of least resistance of electrical current. You will be able to tell if it is because a non-grounded appliance will give off an electrical discharge.**
- **Manufacturer declines all responsibility for any damage due to non-grounding of appliance.**
- DURING THE GUARANTEE PERIOD ONLY BAUMATIC SERVICE ENGINEERS OR AN AUTHORISED AGENT OF BAUMATIC SHOULD CARRY OUT REPAIRS ON THIS UNIT.
- DO NOT USE IF THE SUPPLY CORD IS DAMAGED.
- FOR INSTALLATION PROCEDURE PLEASE CONSULT PAGES 24 – 29.

CHILD SAFETY

- **DO NOT ABUSE OR FORCE THE DISHWASHER. DO NOT SIT ON OR STAND ON ITS DOOR OR DISH RACKS – TIPPING HAZARD.**
- **KEEP CHILDREN AWAY FROM DETERGENT, RINSE AID AND THE OPEN DOOR OF THE DISHWASHER AS THERE COULD BE DETERGENT LEFT INSIDE.**
- **SUPERVISE YOUNG CHILDREN TO ENSURE THEY DO NOT PLAY WITH THE APPLIANCE.**
- **SUPERVISE INFIRM PERSONS IF THEY MUST USE THE APPLIANCE.**
- **REMOVE THE DOOR TO WASHING COMPARTMENT OF YOUR OLD APPLIANCE BEFORE DISCARDING IT.**

DURING USE

- **DO NOT TOUCH THE HEATING ELEMENT DURING OR IMMEDIATELY AFTER USE.**
- **DO NOT USE YOUR DISHWASHER UNLESS ALL ENCLOSURE PANELS ARE PROPERLY IN PLACE. OPEN THE DOOR VERY CAREFULLY IF THE DISHWASHER IS OPERATING. THERE IS A RISK OF WATER SQUIRTING OUT.**

BEFORE USING

SOME ITEMS ARE UNSUITABLE FOR WASHING IN YOUR DISHWASHER. PLEASE SEE PAGE 8 FOR A LIST OF THESE ITEMS.

DO NOT TAMPER WITH THE CONTROLS.

WHEN LOADING ITEMS TO BE WASHED:

1) Keep sharp items like knives away from the door seal.
2) Load sharp knives with the handles up to prevent injuries.

ONLY USE AUTOMATIC DISHWASHER DETERGENT, NOT SOAP OR LAUNDRY DETERGENT.
NEVER USE SOLVENTS AS THIS COULD RESULT IN AN EXPLOSION!

AFTER USE

- **ALWAYS KEEP THE DOOR CLOSED TO AVOID DANGER OF TRIPPING.**
- **CHECK THAT THE DETERGENT DISPENSER IS EMPTY AFTER COMPLETION OF WASH CYCLE.**
- **IF LEAVING UNUSED FOR A LONG TIME, DISCONNECT THE WATER SUPPLY (SEE PP. 17, 26).**

READ AND FOLLOW THIS SAFETY INFORMATION CAREFULLY BEFORE

USING YOUR DISHWASHER FOR THE FIRST TIME!

CONTROL PANEL

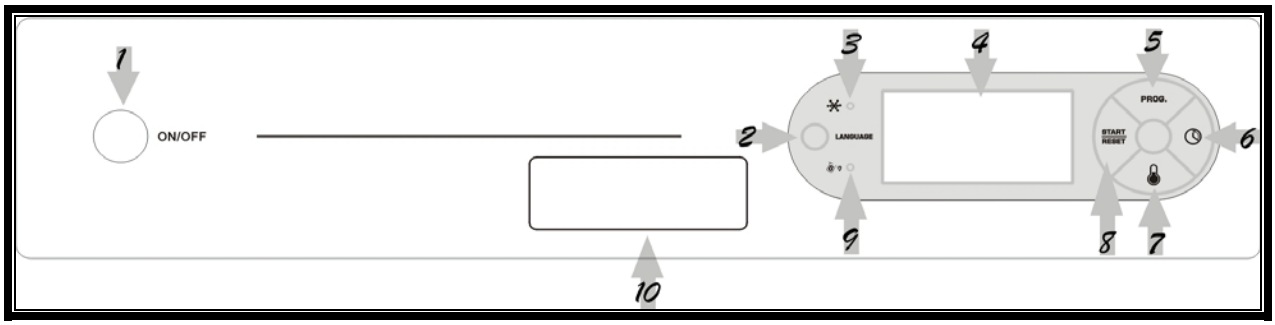

1 **POWER SWITCH:** Turns the Power supply ON & OFF.
2 **LANGUAGE BUTTON:** Select from English, Italian, French, Spanish & German by pressing this button.
3 **RINSE AID WARNING LIGHT:** Add more rinse aid as the indicator on the front panel lights up.
4 **DISPLAY WINDOW:** Shows the remaining time, delay time, running indicator, temperature of water, fault codes, etc.
5 **PROGRAM BUTTON:** Select different programs according to the soiled level, such as Normal, Economy, or Rinse.
6 **DELAY START BUTTON:** Press this button to set the delayed hours for washing. You can delay the start of the wash by up to 9½ hours. NOTE: Each press of this button will delay the start by ½ hour.
7 **TEMPERATURE BUTTON:** Select the temperature you want to wash with by pressing this button.
8 **START / PAUSE BUTTON:** Press this button to start or stop the dishwasher. The light will come on when starting.
9 **SALT WARNING LIGHT:** Add more salt as this indicator on the panel lights up.
10 **DOOR HANDLE:** Pull this to open the door. All operation will stop whenever the door is open.

WARNING – *BEWARE OF HOT WATER & STEAM AS YOU OPEN THE DOOR!*

DISHWASHER FEATURES

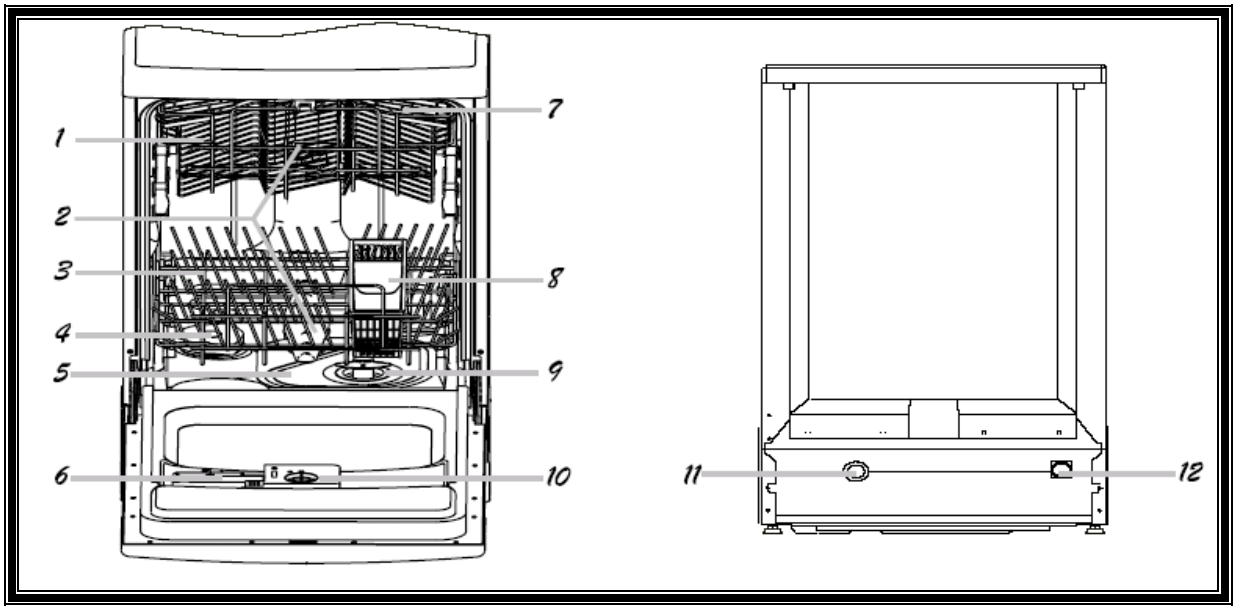

1 Adjustable Upper Basket
2 Spray Arms
3 Lower Basket
4 Water Softener
5 Main Filter
6 Detergent Dispenser
7 Cup Shelf
8 Silverware Basket
9 Coarse Filter
10 Rinse Aid Dispenser
11 Drain Pipe Connector
12 Inlet Pipe Connector

Note on chemicals used by the dishwasher

- Your dishwasher is equipped with an adjustable rinse aid and salt container. Using individual detergents, rinse aid and salt will give the best possible results as this will give the correct dosage of each chemical to suit your needs. Using Two-in-One or Three-in-One tablets may not give the best results when used in your appliance, and may not be suitable for the type of water supply in your home, as they contain pre-determined quantities of salt, rinse aid and detergent and cannot be adjusted to the individual requirements.

If you are going to use 3-in-1 (or 2-in-1) tablets, we suggest that you contact the manufacturer before use or if you experience poor results in the wash performance and ask for assistance from them.

WATER SOFTENING FEATURE

THE LIME IN HARD WATER MAKES DEPOSITS FORM ON DISHES AND UTENSILS. **YOUR DISHWASHER HAS A SPECIAL SOFTENING FEATURE** THAT USES SALT SPECIFICALLY DESIGNED TO ELIMINATE LIME AND MINERALS FROM THE WATER.

WARNING!

ONLY USE DISHWASHER SALT IN YOUR DISHWASHER.

NOTE:

IF YOU USE 3-IN-1 OR 2-IN-1 TABLETS, BE SURE NOT TO ADD SALT AND/OR RINSE AID TO THE APPLIANCE AS THESE TABLET TYPES ALREADY CONTAIN SALT AND/OR RINSE AID. **ADDING SALT AND RINSE AID TO YOUR DISHWASHER'S COMPARTMENTS IN A CYCLE INVOLVING A 3-IN-1 OR 2-IN-1 TABLET WILL RESULT IN OVERDOSING OF INDIVIDUAL CHEMICALS AND MAY CAUSE OVERFLOWING OF WATER AND SUDS.**

LOADING SALT INTO THE SALT CONTAINER

- REMOVE THE LOWER BASKET & THEN UNSCREW AND REMOVE THE CAP FROM THE SALT CONTAINER.
- IF YOU ARE FILLING THE CONTAINER FOR THE FIRST TIME, FILL WITH APPROX. 1 LITRE OF WATER.
- PLACE THE END OF THE SUPPLIED FUNNEL INTO THE HOLE & ADD 1.2 Kg OF SALT. NOTE: IT IS NORMAL FOR A SMALL AMOUNT OF WATER TO COME OUT OF THE CONTAINER.

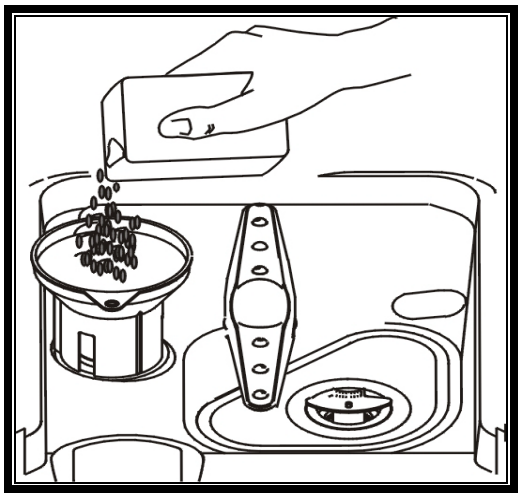

SETTING THE WATER SOFTENER LEVEL

YOU CAN ADJUST THE AMOUNT OF SALT USED BY THE DISHWASHER TO SOFTEN WATER TO GET THE BEST WASHING RESULTS, BASED ON THE HARDNESS OF WATER IN YOUR AREA.

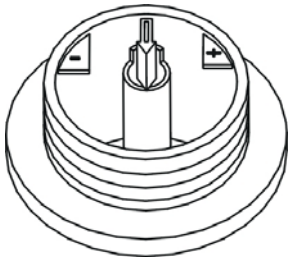

1 UNSCREW THE CAP FROM THE SALT CONTAINER.

2 THERE IS A RING ON THE NECK OF THE CONTAINER. ROTATE THE RING IN AN ANTICLOCKWISE DIRECTION FROM THE "-" SETTING TOWARDS THE "+" SETTING ACCORDING TO THE HARDNESS OF WATER IN USE. SEE TABLE BELOW.

NOTE

1. THE SALT CONTAINER MUST BE REFILLED WHEN THE SALT WARNING LIGHT COMES ON. ALTHOUGH THE SALT CONTAINER MAY BE FULL, THE INDICATOR LIGHT MAY NOT GO OUT UNTIL THE SALT HAS DISSOLVED.
2. IF THERE ARE SALT SPILLS, A SOAK PROGRAM CAN BE RUN TO WASH AWAY SPILLAGE BEFORE USING THE MACHINE.
3. CLEAR ANY SALT GRANULES AWAY FROM THE CONTAINER OPENING.

ADJUSTMENTS SHOULD BE MADE ACCORDING TO THE TABLE BELOW:

WATER HARDNESS			Selector Position	Salt consumption (gram/cycle)	Autonomy (cycles/1.2kgs)
Clarke Degrees	°dH	mmol/l			
0~14	0~18	0~1.8	/	0	/
14~36	18~44	1.8~4.4	–	20	60
36~71	44~89	4.4~8.9	MED	40	30
71	89	8.9	+	60	20

Contact your local water board for information on the hardness of your water supply.

DETERGENT "*How much do I use?*"

To OPEN the DETERGENT DISPENSER DOOR, use the CATCH on its LOWER SIDE.

NOTE: SEE P.13 – WASH CYCLE TABLE for AMOUNT of DETERGENT to use.

NOTE:

- ALWAYS CHECK THE WASH CYCLE TABLE FOR DOSAGE ADVICE. NEVER OVERFILL THE DISPENSER.
- DO NOT OVERDOSE TO PREVENT THE FORMATION OF DEPOSITS (THE WATER SOFTENING FEATURE ALREADY TAKES CARE OF THIS!).

THE HARDER YOUR WATER, THE MORE DETERGENT YOU MAY NEED. ADJUST THE DOSE JUST BY SMALL AMOUNTS UNTIL YOU FIND THE CORRECT AMOUNT OF DETERGENT TO USE.

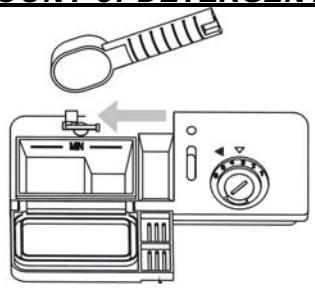

⚠ WARNING!
Dishwasher detergent is corrosive! Take care to keep it out of reach of children.

RINSE AID

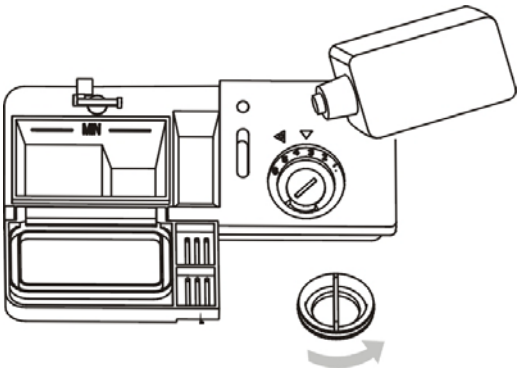

- **TO OPEN THE DISPENSER, TURN THE CAP TO THE 'OPEN' (LEFT) ARROW AND LIFT IT OUT.**
- **POUR THE RINSE AID INTO THE DISPENSER. BE CAREFUL NOT TO OVERFILL.**
- **REPLACE CAP BY INSERTING IT ALIGNED WITH 'OPEN' ARROW & TURN IT TO THE CLOSED (RIGHT) ARROW.**

- THE RINSE AID IS RELEASED DURING THE FINAL RINSE TO PREVENT WATER FROM FORMING DROPLETS ON YOUR DISHES THAT CAN CAUSE SPOTS AND STREAKS. IT ALSO IMPROVES DRYING BY ALLOWING WATER TO FALL OFF THE DISHES.
- YOUR DISHWASHER IS DESIGNED TO USE LIQUID RINSE AIDS. THE RINSE AID DISPENSER CAN BE FOUND INSIDE THE DOOR NEXT TO THE DETERGENT DISPENSER. TO FILL THE DISPENSER, OPEN THE CAP AND POUR THE RINSE AID INTO THE DISPENSER UNTIL THE LEVEL INDICATOR TURNS COMPLETELY BLACK. THE DISPENSER HOLDS ABOUT 100ML OF LIQUID RINSE AID.
- BE CAREFUL NOT TO OVERFILL THE DISPENSER – THIS COULD CAUSE FROTHING. WIPE AWAY SPILLS WITH A DAMP CLOTH. DON'T FORGET TO REPLACE THE CAP BEFORE YOU CLOSE THE DISHWASHER DOOR.

NOTE: IF YOU HAVE SOFT WATER, YOU MAY NOT NEED RINSE AID FOR IT MAY CAUSE A WHITE FILM TO DEVELOP ON YOUR DISHES.

ADJUSTING THE RINSE AID DISPENSER

- As with detergent, the amount of rinse aid needed for your dishes depends on the hardness of the water in your area. *Too much rinse aid can result in foaming and cause cloudiness or streaks on your dishes***.** If your water is very soft, you may not need rinse aid. You can always dilute the rinse aid with an equal amount of water.

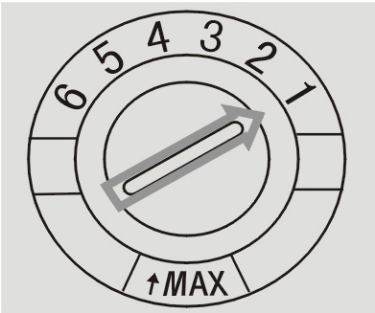

The rinse aid dispenser has six settings. ALWAYS START WITH THE DISPENSER SET ON "1". IF SPOTS & POOR DRYING ARE A PROBLEM, INCREASE THE AMOUNT OF RINSE AID DISPENSED BY REMOVING THE DISPENSER LID AND ROTATING THE DIAL TO "2". IF THE DISHES ARE STILL NOT DRYING PROPERLY OR ARE SPOTTED, ADJUST THE DIAL TO THE NEXT HIGHER NUMBER UNTIL YOUR DISHES ARE SPOT-FREE**.**

*****NOTE: Please read the notes for detergent use on p. 13.**

WHEN TO REFILL THE RINSE AID DISPENSER - If the rinse aid warning light (**SEE** control panel) is not on, you can judge the rinse aid level by looking at the black dot on the rinse aid dispenser. As the rinse aid level decreases, the black dot shrinks. Never let the rinse aid get below ¼ full.

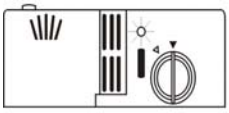

As the rinse aid diminishes, the size of the black dot on the rinse aid level indicator changes, as illustrated below.

- Full
- 3 / 4 full
- 1 / 2 full
- 1 / 4 full – Should refill to eliminate spotting
- Empty

LOADING YOUR DISHWASHER

NOTE:
FOR BEST PERFORMANCE, FOLLOW THESE LOADING GUIDELINES. FEATURES AND APPEARANCE OF RACKS & CUTLERY BASKETS MAY VARY FROM YOUR MODEL.

BEFORE LOADING!

- **REMOVE ALL SCRAPS OF FOOD.**
- **EMPTY DRINKS & LIQUIDS FROM CUPS.**
- **SOFTEN BURNT-ON FOOD IN PANS BY SOAKING.**

*DO **NOT** PUT THESE ITEMS IN YOUR DISHWASHER:*

- BRONZE CUTLERY
- SAUCEPANS WITH WOODEN HANDLES
- CUTLERY WITH WOODEN, HORN, CHINA OR MOTHER OF PEARL HANDLES
- PLASTIC ITEMS THAT ARE NOT HEAT RESISTANT
- OLDER CUTLERY WITH GLUED PARTS
- BONDED CUTLERY ITEMS OR DISHES
- PEWTER OR COPPER ITEMS
- LEAD CRYSTAL GLASS
- STEEL ITEMS SUBJECT TO RUSTING
- WOODEN PLATTERS
- ITEMS MADE FROM SYNTHETIC FIBRES (eg. SPONGES)
- DELICATE, REPAIRED OR PAINT / PATTERN OVERLAID CHINA

Note:
Do not wash stainless steel and silver cutlery together. Iron objects can rust and stain other items. Aluminium tends to go black. Copper, pewter & brass stain.

HOW TO USE THE UPPER RACK

THE UPPER RACK IS FOR MORE DELICATE AND LIGHTER DISHWARE SUCH AS GLASSES, COFFEE & TEA CUPS, SAUCERS, PLATES, BOWLS, AND SHALLOW PANS (PROVIDED THESE ARE NOT TOO DIRTY).

POSITION THE DISHES AND COOKWARE SO THAT THEY DO NOT GET MOVED BY THE SPRAY OF WATER. ALWAYS PLACE GLASSES, CUPS & BOWLS UPSIDE DOWN.

NOTE: YOUR DISHWASHER COMES WITH **AN ADJUSTABLE TOP RACK (BASKET) – PICTURED AT RIGHT**. ITS HEIGHT CAN BE **ADJUSTED BY UNDOING THE FRONT RAIL CLIPS, REMOVING THE RACK COMPLETELY AND LATCHING THE WHEELS OF THE LOWER LEVEL (POSITION '1' IN THE FIGURE ON THE RIGHT) OR THE HIGHER LEVEL (POSITION '2' IN THE FIGURE ON THE RIGHT) IN THE GROOVE OF THE RAIL.**

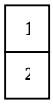

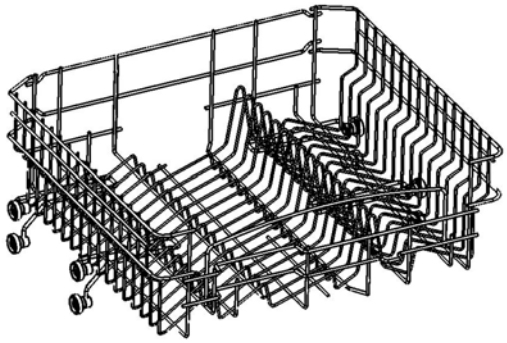

LOADING GUIDE (UPPER RACK):

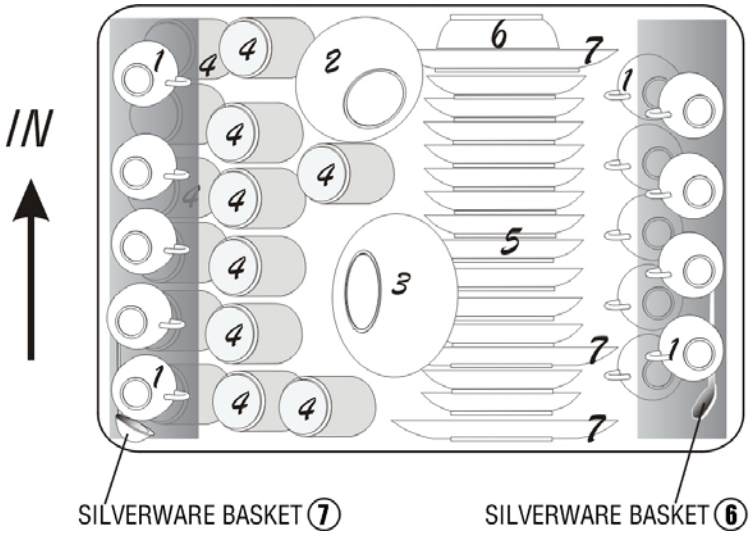

1 Cups
2 Small serving bowl
3 Large serving bowl
4 Glasses
5 Saucers
6 Dish
7 Dessert dishes

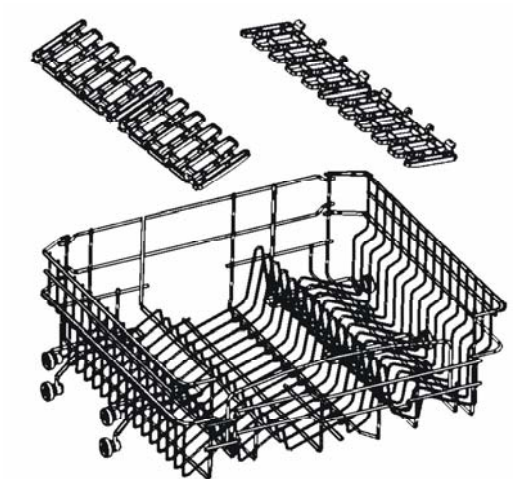

*****NOTE***: THE UPPER RACK HAS SIDE FLAPS** (PICTURED AT LEFT ABOVE BASKET)**. THERE ARE 4 (2 ON EACH SIDE). THESE CAN BE ADJUSTED INTO 2 POSITIONS = POSITION 1 (HIGH) AND POSITION 2 (LOW).**

TO MOVE THE FLAPS BETWEEN THESE POSITIONS, **FIND THE LARGE HINGES CLASPING EACH FLAP TO THE UPPER RACK**. THERE ARE TWO OF THESE AT EITHER END OF EACH FLAP. GENTLY PULL BOTH CLASPS OFF THE WIRE RACK AND MOVE THE FLAP TO THE DESIRED POSITION. ***BE CAREFUL IF YOU HAVE LONG FINGERNAILS!***

POSITION 1
THE UPPER POSITION WILL ACCOMMODATE ITEMS SUCH AS GLASS TUMBLERS (PLACED BENEATH FLAP) AND WINE GLASSES. WINE GLASSES CAN BE PLACED UPSIDE DOWN SO THAT THE NECK NESTLES SNUGLY IN THE GROOVES AT SIDE OF FLAP WITH THE BASE OF THE GLASS FACING UPWARD.

POSITION 2
WHEN THE FLAPS ARE MOVED TO THE LOWER POSITION, THEY CAN BE USED TO HOLD ADDITIONAL TUMBLERS, CUPS AND MUGS. ALWAYS CHECK THAT YOU ARE ONLY PLACING ITEMS ON THE FLAPS THAT WILL CLEAR THE CEILING HEIGHT OF YOUR DISHWASHER WHEN YOU PUSH THE RACK BACK IN. BE PARTICULARLY CAREFUL WITH LONG-STEMMED GLASSWARE SUCH AS CHAMPAGNE GLASSES – ***BREAKAGE HAZARD!***

HOW TO LOAD THE LOWER RACK:

PLACE LARGE ITEMS THAT ARE HARD TO CLEAN IN THE LOWER RACK: ***eg***. **POTS, PANS, LIDS, SERVING DISHES, BOWLS.**

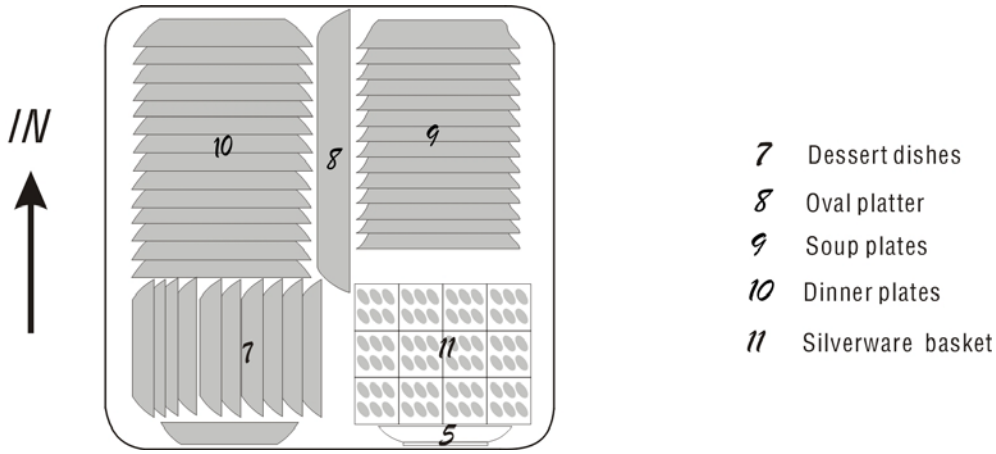

- **POTS, SERVING BOWLS, ETC. MUST ALWAYS BE PLACED UPSIDE DOWN.**
- **DEEP POTS SHOULD BE SLANTED TO LET WATER FLOW OUT.**
- **THE BOTTOM RACK FEATURES FOLD DOWN BASKETS SO THAT LARGER OR MORE POTS & PANS CAN BE LOADED.**

CUTLERY BASKET

CUTLERY SHOULD BE PLACED IN THE CUTLERY BASKET WITH HANDLES ALWAYS POINTING DOWNWARD (AT THE BOTTOM). VERY LONG UTENSILS (LADLES, etc.) SHOULD BE PLACED HORIZONTALLY AT THE FRONT OF THE UPPER RACK.

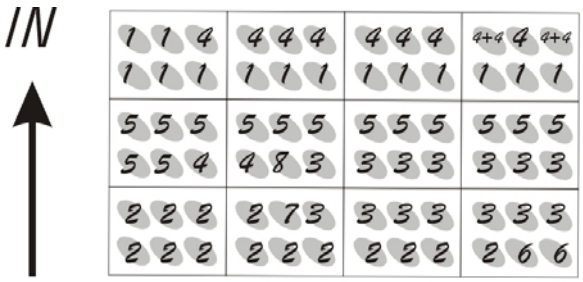

1 Forks
2 Soup Spoons
3 Dessert Spoons
4 Teaspoons
5 Knives
6 Serving Spoons
7 Gravy Ladle
8 Serving Fork

⚠ WARNING!

Do not let any item extend through bottom.

NOTE:

- **WHEN YOU ARE SATISFIED YOU HAVE LOADED ALL THE UTENSILS AND DISHES YOU WANT TO WASH AND HAVE ADDED THE PROPER AMOUNT OF DETERGENT TO THE DISPENSER (REMEMBER TO CHECK THE TABLE ON PAGE 13 FOR THE DOSE THAT'S RIGHT FOR THE WASHING CYCLE YOU WANT), ENSURE THE RACKS ARE PUSHED ALL THE WAY BACK INTO YOUR DISHWASHER AND CLOSE THE DOOR.**
- **YOU ARE NOW READY TO START A WASH CYCLE (SEE NEXT PAGE).**

STARTING A WASH CYCLE

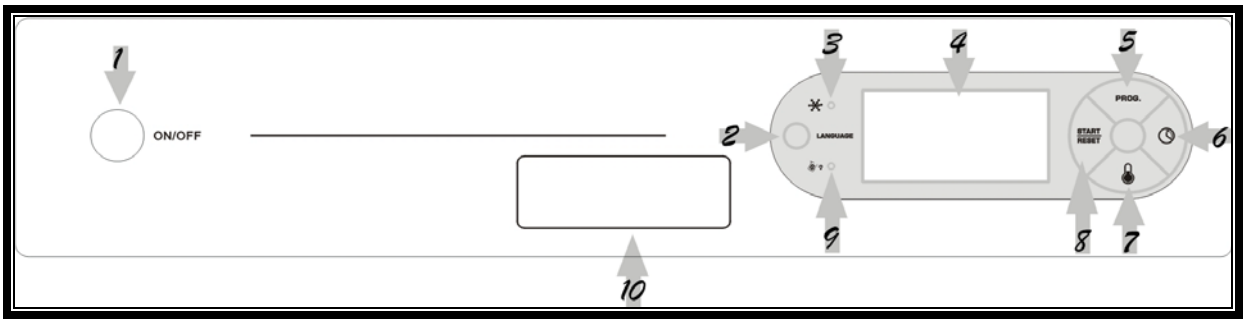

STARTING A WASH CYCLE

1) MAKE SURE THAT THE PLUG OF THE APPLIANCE IS INSERTED INTO THE WALL SOCKET.
2) MAKE SURE THAT THE WATER SUPPLY IS TURNED ON TO FULL PRESSURE.
3) LOAD THE DISHWASHER (SEE THE SECTION ENTITLED 'LOADING YOUR DISHWASHER').
4) POUR IN DETERGENT (SEE THE SECTION ENTITLED 'SALT, DETERGENT & RINSE AID').
5) **PRESS THE PROGRAM SELECTOR BUTTON TO SET THE DESIRED PROGRAM.**
6) **PRESS THE START / PAUSE BUTTON TO START THE WASH CYCLE.** THE ON/OFF LIGHT WILL COME ON. THE WASH CYCLE WILL NOW BEGIN.

Note:
The Delay Timer key (in above figure as mark number '6') will set the start of the washing cycle by 30mins into the future for every press. You can set it up to 9½ hours ahead of time for your convenience.

Approximate Timing of Wash Cycles

Intensive (strong)	Normal	Economy	Rinse	Glass	Rapid	Soak
134 mins.	114 mins.	111 mins.	50 mins.	70 mins.	48 mins.	8 mins

WASH CYCLE TABLE

Program	Cycle	Cycle Selection Information	Description of Cycle	Detergent pre/main	Rinse Aid
Intensive		For the heaviest soiled loads, such as pots,pans,casserole dishes and dishes that have been sitting with dried food on them for a while.	Pre-rinse Pre-rinse(50℃) Wash (50/60/70℃) Rinse Rinse (65/70/75℃) Drying.	5 grams (pre-wash) / 22 grams (main)	★
Normal	(IEC-EN 50242)	For normally soiled loads, such as pots, plates,glasses and lightly soiled pans. standard daily cycle.	Pre-rinse Pre-rinse Wash (50/60℃) Rinse Rinse (65/70℃) Drying.	5 grams (pre-wash) / 25 grams (main)	★
Economic		For lightly soiled loads,such as plates,glasses,bowls and lightly soiled pans.	Pre-rinse Wash (50/60℃) Rinse Rinse (65/70℃) Drying.	22 grams	★
Rinse		For dishes that need to rinsed and dried only	Rinse Rinse (65/70℃) Drying.		★
Glass		A shorter wash for lightly soiled loads that do not need drying.	Pre-rinse Wash (40/50℃) Rinse Rinse (60/70℃) Drying.	15 g.	★
Rapid		For lightly soiled loads, such as glasses, crystal and fine china.	Pre-rinse Wash (40/50℃) Rinse Rinse (55/60℃)	15 g.	
Prerinse		Pre-wash of dishes pots and pans while waiting for the load to be completed after the subsequent meal.	Pre-rinse		

OVERFLOW PROTECTION

YOUR BAUMATIC DISHWASHER HAS AN OVERFILL PROTECTION DEVICE WHICH AUTOMATICALLY SHUTS OFF THE INLET VALVE AND STARTS THE DRAIN PUMP IF THE WATER OVERFLOWS. IF THIS OCCURS THEN TURN OFF THE MAINS WATER SUPPLY BEFORE CALLING THE SERVICE DEPARTMENT. IF THERE IS WATER IN THE BASE PAN BECAUSE OF AN OVERFILL OR SMALL LEAK, THE WATER SHOULD BE REMOVED BEFORE RESTARTING THE DISHWASHER.

WHAT YOU WILL SEE ON THE DISPLAY:

SHOWS THE SELECTED WASHING PROGRAM (*From Left*): INTENSIVE, NORMAL, ECONOMY, RINSE, GLASS, RAPID, PRE-RINSE.

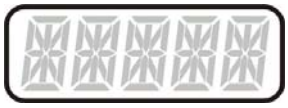

INFORMATION DISPLAY: YOU CAN GET INFORMATION FROM READING WHAT IS SHOWN ON THIS, SUCH AS WASHING PROGRAM, ERROR, DOOR-OPEN, ETC.

WASHING PHASE: (*From left*) The first sign is Pre-rinse; the second sign is main wash; the third sign is rinse; the fourth sign is drying. They will run and alternate during washing.

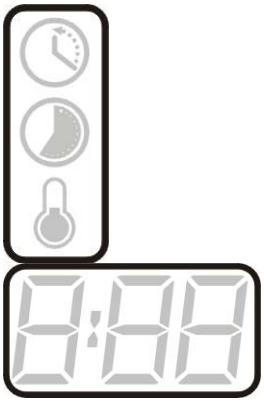

STATE INFORMATION: (*From top*) The first sign shows the time remaining in a washing program. The middle sign indicates the delay time involved. The bottom sign shows the display of the temperature.

DIGITAL DISPLAY: Shows the remaining time, error codes and the delay time.

CHOICE OF TEMPERATURE: YOU CAN CHOOSE A WASH FROM FOUR AVAILABLE TEMPERATURES. THE INTENSITY OF WASHING WILL BE CHANGED.

FORGET TO ADD A DISH?

A FORGOTTEN DISH CAN BE ADDED AT ANY TIME BEFORE THE DETERGENT DISPENSER OPENS.

- OPEN THE DOOR A LITTLE TO STOP THE WASHING.
- AFTER THE SPRAY ARMS STOP WORKING, YOU CAN OPEN THE DOOR COMPLETELY.
- ADD FORGOTTEN DISHES.
- CLOSE THE DOOR, THE DISHWASHER WILL WORK AFTER TEN SECONDS.

Need to Change the Cycle?

1. PRESS THE POWER SWITCH TO STOP WASHING
2. PRESS THE 'PROG.' BUTTON TO SELECT THE NEW PROGRAM
3. PRESS THE POWER SWITCH AGAIN TO START WASHING

* **Note –** ***You may have to start a new cycle by reloading the detergent if it has been a long time since the old cycle began. See page 12 to see how to do this.***

At the End of the Wash Cycle

At end of washing, the time display will flash for 8 seconds while the ALARM sounds. The ALARM will not sound at the end of delayed washing, however. CAUTION – HOT interior. Leave about ½ hour before unloading.

FILTERING SYSTEM

FOR YOUR CONVENIENCE, WE HAVE PLACED THE FILTERING SYSTEM WITHIN EASY REACH INSIDE THE TUB. THE FILTER REMOVES BITS OF FOOD TRAPPED IN THE FILTER FROM THE WASH WATER SO IT CAN BE RECIRCULATED DURING THE CYCLE. THERE ARE THREE PARTS TO THE FILTERING SYSTEM: **1) The Main Filter, 2) The Coarse Filter & 3) The Fine Filter**.

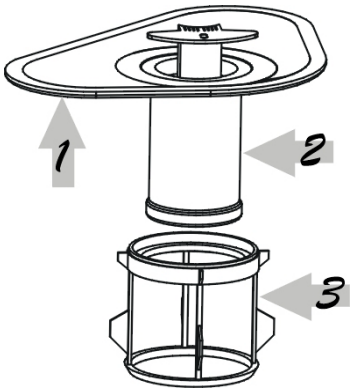

1 **MAIN FILTER**
Food and soil particles trapped by this filter are pulverized by a special jet on the lower spray arm and washed down the drain.

2 **COARSE FILTER**
Larger items, such as pieces of bone or glass that could clog the drain are trapped in the coarse filter. To remove an item caught in this filter, **gently squeeze the tabs on top of this filter and lift it out.**

3 **FINE FILTER**
This filter holds soil and food residue in the sump area and prevents it from being re-deposited on the dishes during a cycle.

Caring for your Dishwasher

CLEANING THE OUTSIDE SURFACES OF YOUR APPLIANCE

- TO CLEAN THE EXTERIOR OF YOUR DISHWASHER (INCLUDING THE CONTROL PANEL), USE A LIGHTLY DAMPENED CLOTH THEN DRY THOROUGHLY. **NEVER USE SHARP OBJECTS, SCOURING PADS OR HARSH CLEANERS ON ANY PART OF THE APPLIANCE. SOME PAPER TOWELS CAN SCRATCH.**

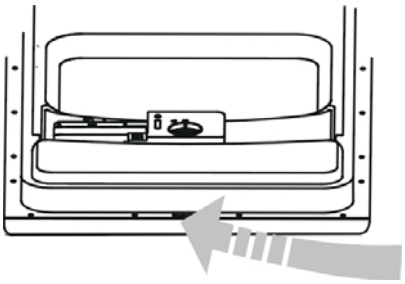

- TO CLEAN THE EDGE AROUND THE DOOR, ONLY EVER USE A SOFT WARM, DAMP RAG. DO NOT USE A SPRAY CLEANER HERE OR WHEN CLEANING THE DOOR PANEL AS THIS MAY HARM THE DOOR LOCK AND ELECTRICAL PARTS.

CLEANING THE SPRAY ARMS

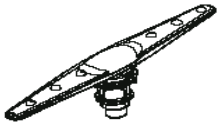

THE SPRAY ARMS NEED REGULAR CLEANING AS HARD WATER RESIDUES WILL CLOG THEIR JETS & BEARINGS. TO REMOVE THE SPRAY ARM, SCREW OFF THE NUT TO TAKE OUT THE WASHER ON TOP OF THE SPRAY ARM AND REMOVE THE ARM. WASH THE ARMS IN SOAPY WARM WATER & USE A SOFT BRUSH TO CLEAN THE JETS. REPLACE THE SPRAY ARM AFTER RINSING IT THOROUGHLY.

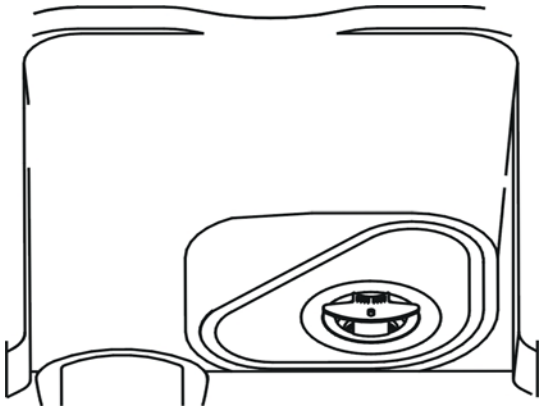

CLEANING THE FILTERS

- THE FILTER ASSEMBLY MUST BE KEPT CLEAN FOR BEST PERFORMANCE. You should remove the larger bits of food trapped in the filter after each wash cycle by rinsing the semicircular filter and cup under running water. **To remove the filter assembly, pull up on the cup handle**.
- ***The entire filter assembly should be cleaned at least once a month.***

- To clear the coarse filter and the fine filter, use a cleaning brush. Then, reassemble the filter parts as shown in the figure above and reinsert the entire assembly in the dishwasher in its seat & press downward to secure it.

- Improper replacement of the filter may impair appliance performance and damage dishes and utensils.

- ***Warning - <u>never</u> run*** *the dishwasher* ***without the filters*** *in place!*

- ***Warning -*** *Before cleaning the inner cavity of the appliance always allow 30 minutes for the Element to cool down to avoid injury!*

HOW TO KEEP YOUR DISHWASHER IN SHAPE

AFTER EVERY WASH, leave the door slightly ajar so that moisture and odours are not trapped inside.

REMOVE THE PLUG before cleaning or performing maintenance. Never run the risk of electric shocks.

DO NOT USE SOLVENTS OR ABRASIVE CLEANING AGENTS to clean the exterior and the rubber parts of the dishwasher. Only use a cloth and warm soapy water. To remove spots or stains from the surface of the interior, use a cloth dampened with water and a little white vinegar, or a cleaning product made specifically for dishwashers.

WHEN YOU GO ON HOLIDAY, run a wash cycle with the dishwasher empty. Then unplug it, turn off the water supply and leave the door slightly ajar to prevent odours and mould from developing.

MOVING THE APPLIANCE is possible but KEEP IT UPRIGHT.

SEALS can trap food, which in turn will cause odours. Periodic cleaning with a damp cloth or sponge will prevent this from becoming a problem.

PROTECTING YOUR DISHWASHER AGAINST FREEZING

If your dishwasher is left in an unheated place during the winter, ask a service technician to:

1) **Cut off electrical power to the dishwasher. Remove fuses or trip circuit breaker.**
2) **Turn off the water supply and disconnect the water inlet pipe from the water valve & discharge hoses.**
3) **Drain water from the inlet pipe and water valve (Use a pan to catch the water).**
4) **Reconnect the water inlet pipe to the water valve.**
5) **Remove the plastic sump cover in the tub bottom and use a sponge to soak up water in the rubber boot.**

BEFORE YOU CALL FOR SERVICE ...

CHECKING AGAINST THE CHARTS BELOW MAY FIX YOUR PROBLEM.

PROBLEM	***POSSIBLE CAUSES***	***WHAT TO DO***
Dishwasher doesn't run!	• Fuse blown, or the circuit breaker acted	• Replace fuse or reset circuit breaker. • Remove any other appliances feeding from the same socket as the dishwasher.
	• Power supply is not turned on	• Make sure the dishwasher is turned on and the door is closed securely.
	• Water pressure is low	• Check that the water supply is connected properly and the water is turned on.
Drain Pump doesn't stop!	• Overflow	• The system is designed to detect an overflow. When it does, it shuts off the circulation pump and turns on the drain pump. Call a Baumatic Ltd approved technician.
Noise!	• Some audible sounds are normal	• Sound from soft food shredding action and detergent cup opening. This is not a problem.
	• Utensils are not secure in the baskets or something small has dropped into the basket and is loose	• Ensure everything is placed securely in the dishwasher.
	• Motor Hums	• Dishwasher has not been used regularly. If you do not use it often, remember to set it to fill and pump out every week. (See Wash Cycle table). This will help keep the seal moist.

PROBLEM	POSSIBLE CAUSES	WHAT TO DO
Suds in the Tub!	• Improper detergent	• Use only special dishwasher detergent to avoid suds.
Stained tub Interior!	• Spilled rinse agent	• Always wipe up rinse agent spills immediately.
	• Detergent with colorant was used	• Make sure you use detergent without colorant.
Dishes are not dried!	• Rinse agent dispenser is empty	• Make sure that the rinse agent dispenser is filled.
Dishes and Flatware not Clean!	• Improper program	• Select stronger program.
Spots and Filming on Glasses and Flatware!	• Improper rack loading	• Make sure there are no large dishes blocking the action of the detergent dispenser and the spray arms.
	• Extremely hard water • Low inlet temperature • Overloading the dishwasher • Improper loading • Old or damp powder detergent • Empty rinse agent dispenser • Incorrect dosage of detergent	**To remove spots from glassware:** **1.** Take all metal utensils out of the dishwasher. **2.** Do not add detergent. **3.** Choose the longest cycle. **4.** Start the dishwasher and let it to run for 18 - 22 minutes, then it will be in the main wash. **5.** Open the door and pour 2 cups of white vinegar into the bottom of the dishwasher. **6.** Close the door and let the dishwasher complete the cycle. **7.** If the vinegar does not work, repeat as above, only use ¼ cup (60ml) of citric acid crystals instead of vinegar.

PROBLEM	POSSIBLE CAUSES	WHAT TO DO
Cloudiness on glass!	• Combination of soft water and too much detergent	• Use less detergent if you have soft water and select a shorter cycle to clean the glassware.
Yellow or brown film on inside surfaces!	• Tea or coffee stains	• Use a solution of ½ cup of bleach and 3 cups warm water to remove the stains by hand. Rinse thoroughly.
White film on inside surface!	• Iron deposits in water can cause an overall film	• You have to call a water softener company for a special filter.
Detergent cup lid won't latch!	• Hard water minerals	• To clean the interior, use a damp sponge with dishwasher detergent and wear rubber gloves. Never use any other cleaner than dishwasher detergent for the risk of foaming or suds.
	• Button is not in the 'OFF' position	• Turn the Button to 'OFF' position and slide the door latch to the left.
Detergent left in dispenser cups!	• Dishes block detergent cups	• Reload the dishes properly.
Steam!	• Normal phenomenon	• There is some steam coming through the vent by the door latch during drying and water draining.

PROBLEM	POSSIBLE CAUSES	WHAT TO DO
Black or grey marks on dishes!	• Aluminium utensils have rubbed against dishes	• Use a mild abrasive cleaner to eliminate those marks by hand.
Water standing in the bottom of the tub!	• This is normal	• A small amount of clean water around the outlet on the tub bottom at the back of the tub keeps the water seal lubricated. No action needed.
Dishwasher leaks!	• Overfilled dispenser or rinse aid has spilled	• Be careful not to overfill the rinse aid dispenser. • Spilled rinse aid could cause oversudsing and lead to overflowing. • Wipe away any spills with a damp cloth.
	• Dishwasher isn't level	• Make sure the dishwasher is level.
	• 3-in-1 Tablets	• Make sure if you're using 3-in-1 tablets that you do not put rinse aid and salt into the appliance as well.
Door popping open!	• Appliance not level	• Level appliance & ensure top screws attaching appliance to work surface are not lifting the weight of the dishwasher.

WARNING!

IF OVERFLOW OCCURS, TURN OFF THE MAIN WATER SUPPLY BEFORE CALLING A SERVICE TECHNICIAN. IF THERE IS WATER IN THE BASE OF THE TANK PAN BECAUSE OF AN OVERFILL OR SMALL LEAK, THE WATER SHOULD BE REMOVED BEFORE RESTARTING THE DISHWASHER.

ERROR CODES - *WHAT THEY MEAN*

**** YOUR DISHWASHER MAY EXPERIENCE A FAULT. SHOULD THIS HAPPEN, A CODE CONSISTING OF 'E' & A NUMBER FROM 1-7 EXCEPT 5 CAN BE DISPLAYED.***

USE THIS TABLE TO UNDERSTAND WHAT IS WRONG.

****NOTE*:*** *ALWAYS CALL FOR A* ***Baumatic Ltd*** *ENDORSED / APPROVED SERVICE TECHNICIAN TO CARRY OUT REPAIRS.*

CODE	SYMPTOM:	CAUSE:	WHAT TO DO:
'E1'	**LONGER FILL TIME.**	**FAUCET IS NOT OPENED.**	**Ensure that inlet hose is not kinked or crushed.**
'E2'	**LONGER or EXTENDED DRAINING TIME**	**THE DRAIN PIPE WAS PLACED TOO HIGH WHEN IT WAS INSTALLED.**	**Ensure drainage system is as per manual and not extended.**
'E3'	**LONGER HEATING TIME – NOT REACHING REQUIRED TEMPERATURE**	**MALFUNCTION OF TEMPERATURE SENSOR OR OF HEATING ELEMENT.**	**CALL** FOR A QUALIFIED SERVICE TECHNICIAN.
'E4'	**OVERFILLED**	**TOO MUCH INLET WATER.** ***NOTE * - THERE ARE NUMEROUS CAUSES OF AN 'E4' MESSAGE. REFER TO APPLIANCE USAGE SECTION OF THIS MANUAL FOR GUIDELINES ON HOW TO PREVENT AN OVERFILL.**	**Overdosing. 3-in-1 put in with salt and/or rinse aid in the appliance =overdose.** **Could also be a Water Pressure problem.**
'E6'	**OPEN CIRCUIT**	**THERMISTOR.**	**CALL** FOR A QUALIFIED SERVICE TECHNICIAN.
'E7'	**SHORT CIRCUIT**	**THERMISTOR.**	**CALL** FOR A QUALIFIED SERVICE TECHNICIAN.

WARNING!

IF OVERFLOW OCCURS, TURN OFF THE MAIN WATER SUPPLY BEFORE CALLING A SERVICE TECHNICIAN. IF THERE IS WATER IN THE BASE OF THE TANK PAN BECAUSE OF AN OVERFILL OR SMALL LEAK, THE WATER SHOULD BE REMOVED BEFORE RESTARTING THE DISHWASHER.

DISHWASHER CHARACTERISTICS

The BAUMATIC BDW1 dishwasher model is based firmly on convenience. Apart from having the same general workings as other household dishwashers, it has several extra features.

Overflow protection – Your dishwasher has an overfill protection program which could automatically shut off the inlet valve and start the drain pump if the water Overflows.

Stainless steel tub- You need not worry about stains to the tub.

Error alarm– Fault codes show on the display if there is a fault with your dishwasher.

Temperature display - Displays the wash temperature at any moment. If you know the water temperature, you'll be less likely to be scalded when you open the door.

4 Different wash temperatures The intensive, normal, economic, rinse, glass and rapid wash have different temperature options which you can set before you start a washing cycle.

14 place settings - Normal wash load of 14 place settings.

Rinse aid Warning Indicator - If the rinse aid is running low, this signal will light up on the control panel, alerting you to top the rinse aid level up so the machine can keep at its optimum performance level.

Adjustable upper basket - Even if the dishware is large, you can load the dishes by adjusting the basket.

Salt Warning Indicator - If the salt is running low, this signal will light up on the control panel to alert you to top the salt level up so the machine can keep at its optimum performance level.

Language display Your dishwasher can display in 6 different languages – English, Spanish (Espanol), French (Francais), Italian (Italiano), Portuguese & German (Deutsch).

Remaining time indicator The length of time left in the program will be clearly displayed in the text window, leaving you in no doubt as to when the program will end.

Time delay feature – This allows the start of the program to be delayed between 1 and 9½ hours for your convenience and for saving on energy!

INSTALLATION INSTRUCTIONS

NOTE: APPLIANCE SHOULD ONLY BE FITTED BY A TRAINED TECHNICIAN

INSTALLING YOUR DISHWASHER

a) PREPARATION

Before you install your appliance, make sure that the place you have chosen to fit it is:

- Near the existing power socket.
- So that you can choose one side of the cabinet cavity to easily connect the dishwasher's drain hoses.
- Near your sink so you have easy access to the water inlet and drain hoses.
- If dishwasher is to be installed at the corner of cabinet area, make sure you have enough space when the door is opened.
- Is structured so that you have less than 5 mm between the top of the dishwasher and cabinet. Also check that the outer door is aligned to cabinet. (See figures below).

【Figure1】

Cabinet dimensions
Less than 5mm between the top of dishwasher and cabinet and the outer door aligned to cabinet.

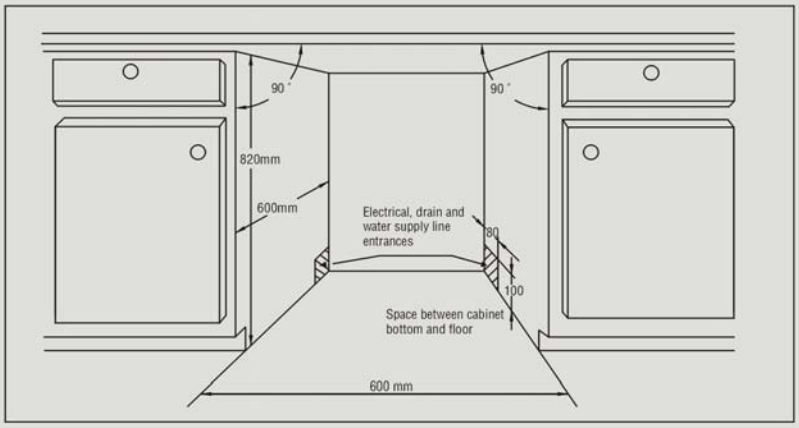

【Figure2】

Minimum space when the door is opened

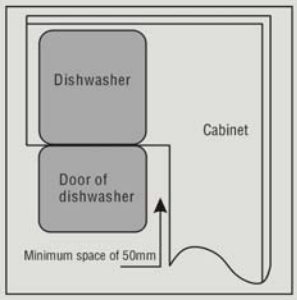

b) PLACING AND FITTING YOUR DISHWASHER'S OPTIONAL FURNITURE DOOR

1 The furniture door (an optional accessory fitted to match your kitchen décor available from your kitchen unit dealer) can be attached to the front of the dishwasher according to the following diagram. (Measurement is in millimetres):

. ***NOTE***: **THE MAXIMUM WEIGHT OF THE DOOR IS 4 KILOGRAMS.**

- DO NOT INSTALL WITH SCREWS THROUGH THE DOOR ONLY.
- ONLY USE THE 2 SCREW HOLES AND BRACKETS AVAILABLE.
- FAILURE TO INSTALL DOOR CORRECTLY CAN CAUSE PROBLEMS WITH THE DOOR / PERFORMANCE OF YOUR APPLIANCE.

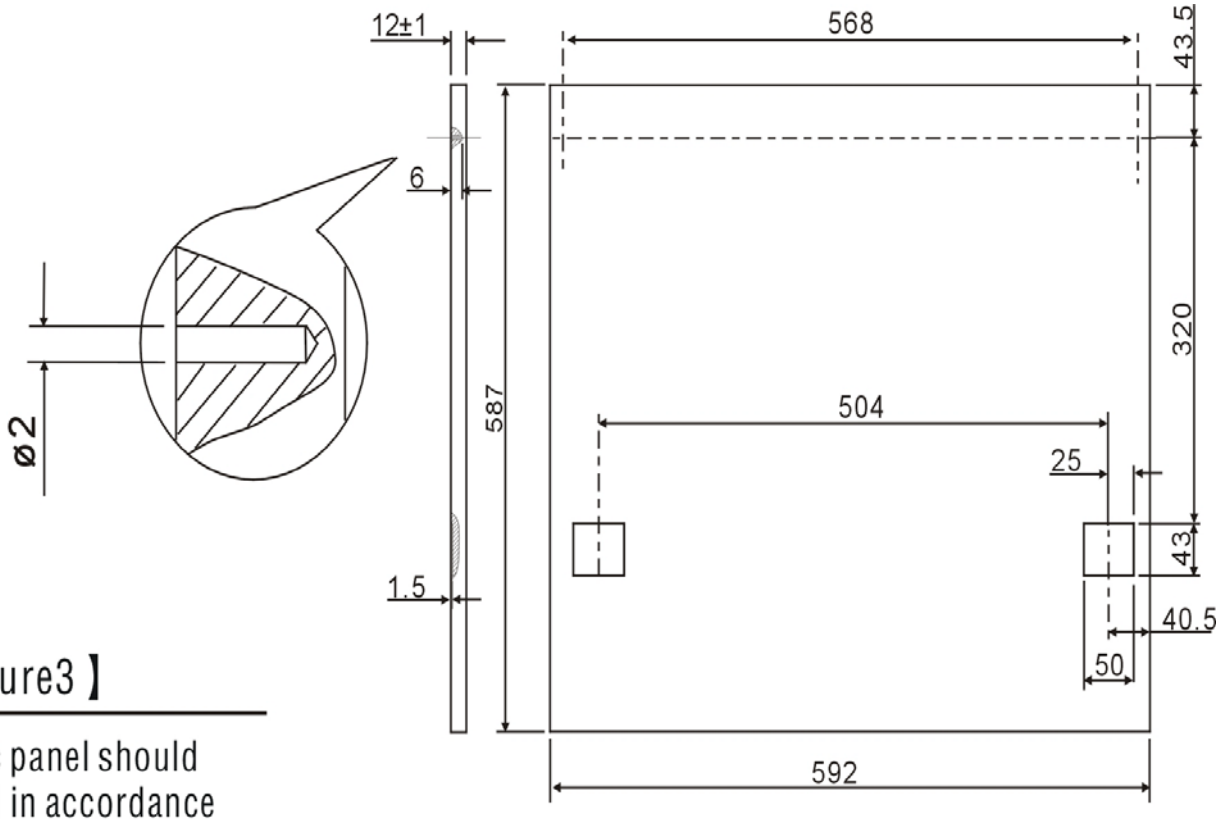

【Figure3】

The aesthetic panel should be processed in accordance with the illustrated dimensions

(Unit: mm)

The length of the panel should be within the range of 506.5--587mm, not more than 587mm.

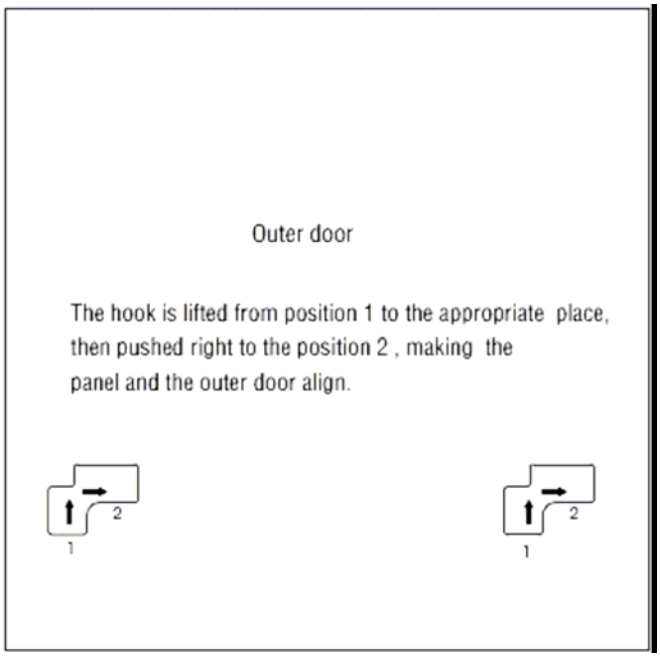

【Figure4b】

Installation of aesthetic wooden panel

1. Take away the cover
2. pin up the screw
3. get back the cover

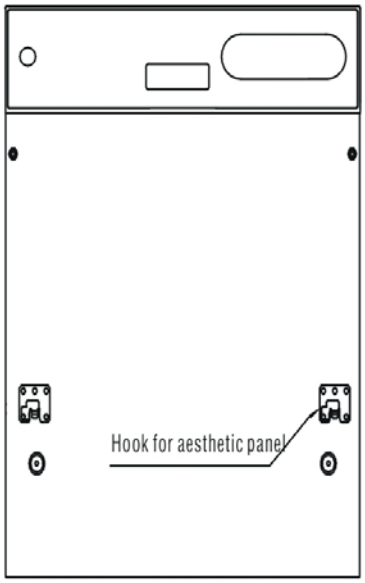

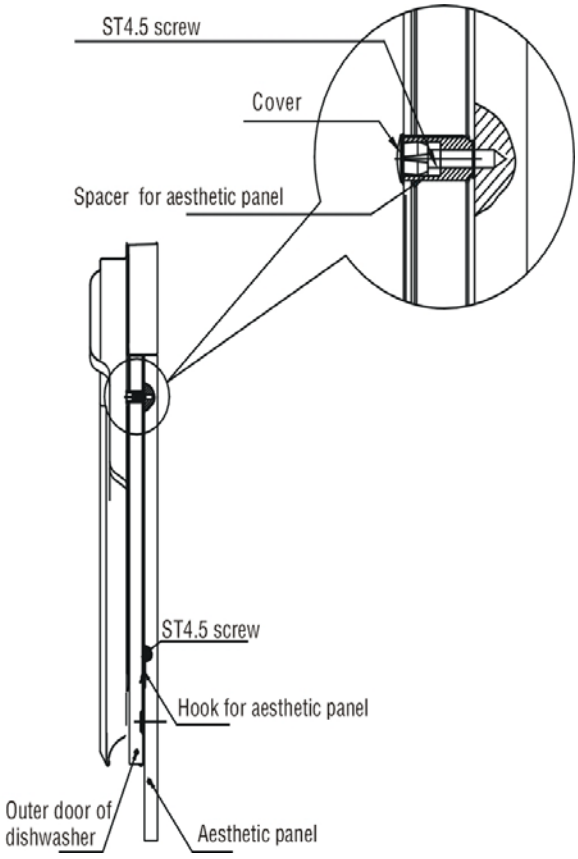

c) ***TENSION ADJUSTMENT OF THE DOOR SPRING***

Your dishwasher's outer door is attached to springs. These are set at the factory to ensure they're at the proper tension so that the door can open and close smoothly and conveniently.

Note: If you have installed a cover panel over the door, you will have to adjust the door spring tension.

- **Using an Allen key, rotate the adjusting screw to tighten or slacken the steel cable. You must do this or damage to your dishwasher may result.**

The door's spring tension is good when the door remains horizontal in the fully opened position, yet rises to a close with the slight lift of a finger.

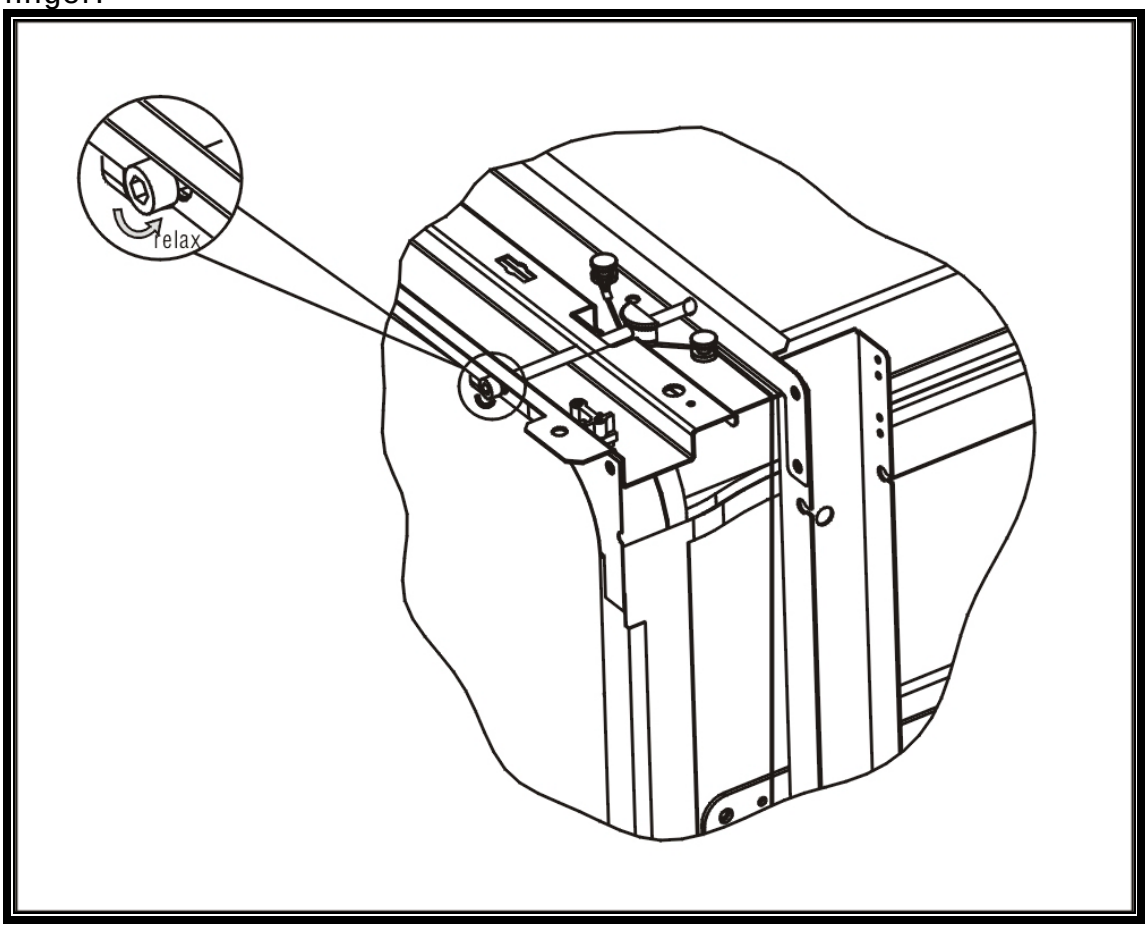

Warning*: *failure to adjust the door spring tension could result in damage to your dishwasher!

d) NEXT, CONNECT THE WATER INLET (SEE FIGURE BELOW):

Connect the cold water supply hose to a threaded ¾ inch connector and make sure that it is fastened tightly in place.
Attach **tube C** to the cold water **supply A**.
If the water pipes are new or have not been used for a long time, let the water run to make sure that the water is clear and free of impurities. The water inlet may get blocked and damage the appliance.
Make sure the water pressure is the same as the range indicated on the data tag.

DO NOT CONNECT TO THE HOT WATER SYSTEM!

If your appliance is fitted with an aqua stop system then this must be fitted vertically (pointing upwards) not downwards or sideways.

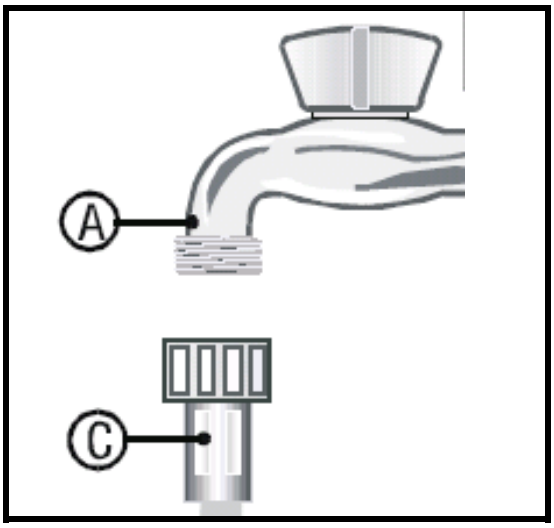

e) *THEN, CONNECT THE DRAIN HOSE* (SEE FIGURE BELOW):

The curved end of the drainage hose should be hooked into the drainage stand pipe or, alternatively, over the edge of your sink.

During installation, make sure that:

- The drainage hose is not kinked or crushed.
- The hose end, relative to the top surface of the dishwasher (SEE FIGURE BELOW), must be placed at a height between 32cm and 80cm.
- The end of the hose must never be immersed in water.
- The drainage hose must not be extended to more than a maximum length of 1 metre. The extension must have the same internal diameter. Furthermore, the maximum height at which the hose end can be placed (in the case of an extended tube) must be reduced from 80cm to 50cm.
- The drainage stand pipe must have an internal diameter of no less than 4 cm.

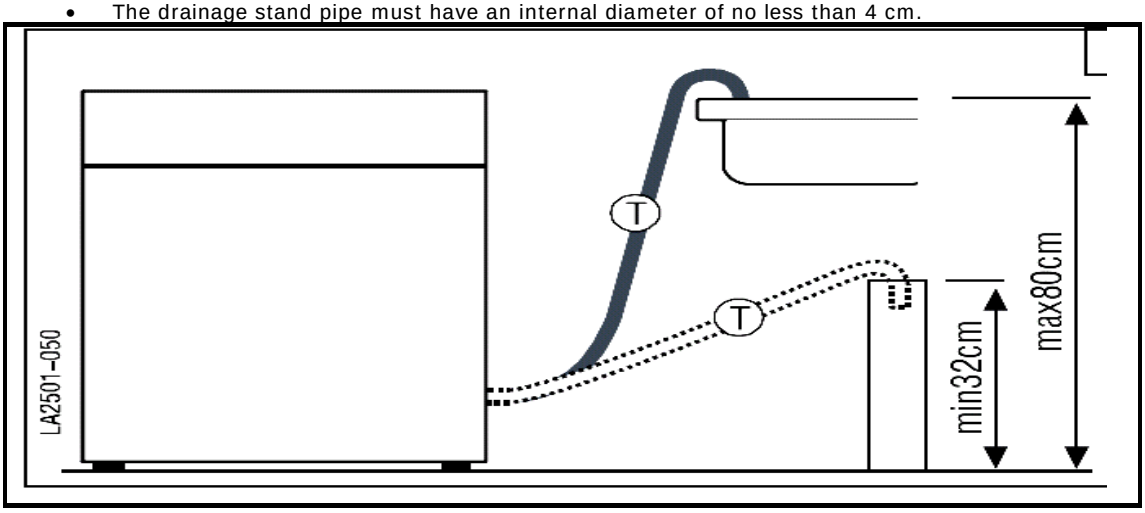

NOTE: DO NOT EXTEND THE DRAIN HOSE AS THIS CAN AFFECT THE PERFORMANCE OF THE DISHWASHER.

f) NOW YOU ARE READY TO CONNECT THE POWER CORD.

WARNING!
ELECTRICITY CAN BE DANGEROUS. PLEASE READ THE FOLLOWING CAREFULLY:

ELECTRICAL CONNECTION

WARNING!
Insure proper ground exists before use

CAUTION, *for personal safety:*
DO NOT USE AN EXTENSION CORD OR AN ADAPTER PLUG WITH THIS APPLIANCE.
DO NOT, UNDER ANY CIRCUMSTANCES, CUT OR REMOVE THE THIRD GROUNDING PRONG FROM THE POWER CORD.

Electrical Requirements
The dishwasher is designed for operation on an adequately wired individual **220-240V AC, 50Hz** system. The required fuse rating is **13amp**. Fused electrical supply is required – copper wire only. Time delay fuse or circuit breaker is recommended. **Make sure that this appliance runs off its own separate circuit**. Outlet should be placed in adjacent cabinet.

WARNING – ENSURE PROPER GROUND EXISTS BEFORE USE.

After making sure that the voltage and the frequency values for the current in your home correspond to those on the rating plate and that the electrical system is sized for the maximum voltage on the rating plate, insert the plug into an electrical socket which is earthed properly. If the electrical socket to which the appliance must be connected is **not right** for the plug, replace the socket, rather than using adaptors of the like as they **could cause overheating and fire**.

g) NOW, PUT THE DISHWASHER ON THE SLIDE RAILS *(These are supplied so your appliance can be pushed into place easily and to protect your floor surface from pressure points).* *See figure at bottom of page.*

h) THEN, APPLY THE CONDENSATION STRIP.

The Condensation Strip must be fitted to the underside of the worktop above your dishwasher to protect it against any moisture. Its purpose is to deflect steam rising from your appliance to protect your worktop's underside.

- The strip is located inside your dishwasher.
- Ensure the surface is clean prior to sticking to underside of the worktop.
- Separate the backing paper from the strip.
- Stick to the underside of the worktop. **Note: Failure to attach strip could result in damage to the underside of your work surface!**

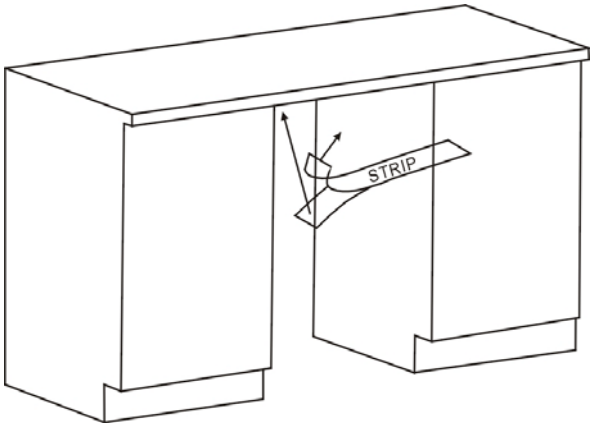

i) NOW YOU ARE READY TO PUSH THE DISHWASHER INTO POSITION (SEE FIGURE BELOW):

NOTE –

***MAKE SURE YOU HAVE THE DISHWASHER ON ITS SLIDE RAILS* (STEP 4 IN ILLUSTRATION ON RIGHT**).

THEN MOVE IT INTO THE CABINET RECESS (AS **PICTURED ON RIGHT**). ENSURING THAT IT IS BACKED UP AGAINST THE WALL. ATTACH THE FURNITURE DOOR **(STEP 1 AS PICTURED ON RIGHT**) IF YOU HAVE NOT ALREADY DONE SO.

YOU ARE NOW READY TO SECURE YOUR APPLIANCE TO THE CABINET AREA (**STEP 8 AS PICTURED ON RIGHT**) & (**STEPS 2 & 7 AS PICTURED ON RIGHT**).

SEE p. 33 FOR FURTHER INSTRUCTIONS AS TO HOW TO ACCOMPLISH THESE.

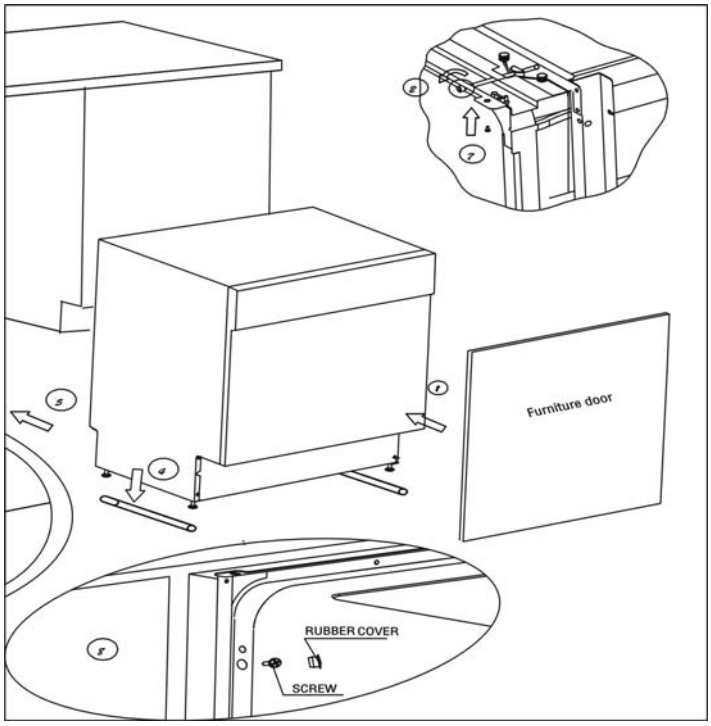

j) NOW GET THE DISHWASHER LEVEL.

***NOTE*: YOUR DISHWASHER MUST BE LEVEL FOR PROPER DISH RACK OPERATION AND WASH PERFORMANCE.**

WARNING!

BE CAREFUL WHILE YOU ARE LEVELLING YOUR DISHWASHER IN PLACE – IT COULD TIP OVER AND INJURE YOU!

CONSULT THE FIGURE BELOW FOR HELP!

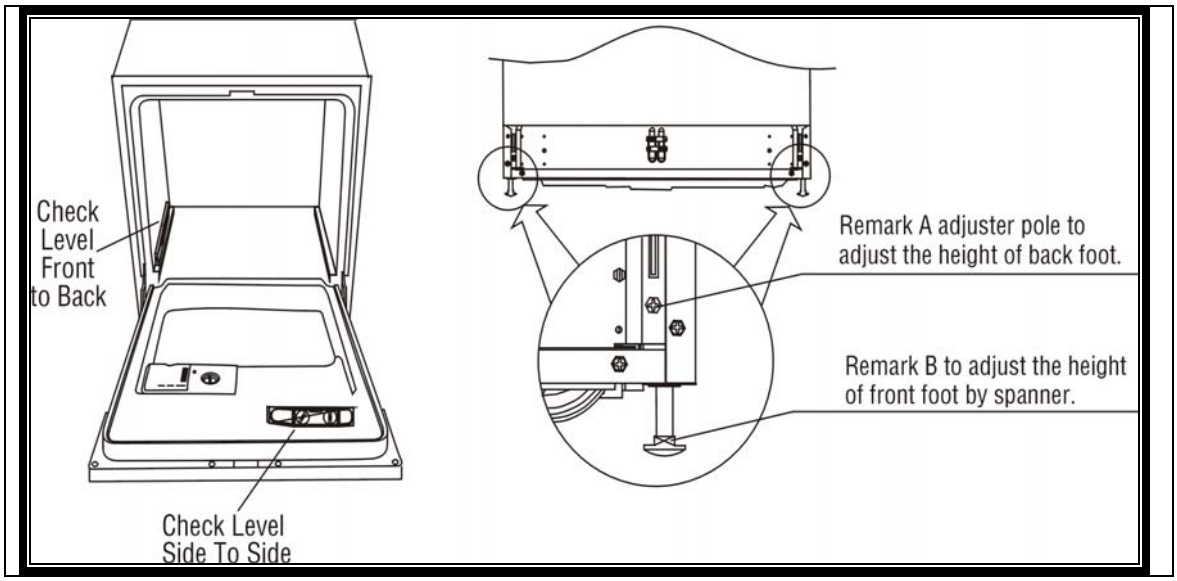

THE REAR FEET CAN BE ADJUSTED FROM THE FRONT OF THE DISHWASHER BY TURNING THE SCREWS ON THE LEFT AND RIGHT HAND SIDES OF THE CABINET. TO ADJUST THE FRONT FEET, USE A WRENCH / SPANNER AND TURN THE FRONT FEET UNTIL THE DISHWASHER IS LEVEL (PLEASE SEE 'REMARK B' IN THE ABOVE FIGURE). WHEN YOU ROTATE THE ADJUSTER POLE CLOCKWISE, THE BACK FOOT WILL DRIVE UP THE DISHWASHER. (PLEASE SEE 'REMARK A' IN THE ABOVE FIGURE). PLEASE NOTE THAT THE FRONT LEVELLING FEET ARE HELD TO THE APPLIANCE BY LOCKING NUTS. PLEASE HANDLE THESE WITH CARE WHEN INSTALLING.

CAUTION:

IT IS IMPORTANT THAT YOU RAISE THE BACK OF THE DISHWASHER WHILE YOU ARE LEVELLING THE REAR FEET. THIS CAN BE ACHIEVED USING A LEVER AND FULCRUM. TAKE GREAT CARE WHEN ATTEMPTING TO MOVE OR TILT YOUR DISHWASHER IN ANY WAY. NOTE: *BAUMATIC WILL NOT BE LIABLE FOR ANY INJURY OR DAMAGE INCURRED WHILST YOU ATTEMPT TO MOVE YOUR DISHWASHER.*

k) THE DISHWASHER MUST NOW BE SECURED IN PLACE.

THERE ARE TWO WAYS TO DO THIS, DEPENDING ON YOUR TYPE OF WORK SURFACE. REMEMBER THAT YOUR DISHWASHER'S WEIGHT MUST REST ON ITS FEET. THE FASTENINGS AT ITS TOP ARE TO GIVE STABILITY AND WILL PREVENT IT FROM TIPPING FORWARD:

NORMAL WORK SURFACE - SECURE TO THE WORK SURFACE'S UNDERSIDE BY USING TWO WOODSCREWS ENSURING THAT THE DISHWASHER CAN OPEN AND CLOSE COMFORTABLY.

MARBLE OR GRANITE WORK TOP – FOR THESE WORKTOPS, YOU WILL NOT BE ABLE TO SECURE THE TOP OF THE DISHWASHER TO THE UNDERSIDE OF THE SPECIAL WORK SURFACE. BECAUSE OF THIS, YOU WILL HAVE TO SECURE THE BRACKET TO THE SIDE PANELS OF THE

DISHWASHER CABINET AND SECURE THE DISHWASHER TO THE FURNITURE HOUSING. PUT THE RUBBER CAP OVER THE SCREW.
NOTE*: DO NOT PUT ANY WEIGHT FROM THE DISHWASHER ON THESE SCREWS – ENSURE YOUR DISHWASHER'S WEIGHT RESTS ENTIRELY ON ITS FEET.*

FINAL CHECKLIST BEFORE OPERATING

***NOTE*: BEFORE YOU START USING YOUR DISHWASHER, PLEASE MAKE SURE YOU HAVE CHECKED:**

- **WHETHER THE DISHWASHER IS LEVEL AND FIXED.**
- **WHETHER THE INLET VALVE IS OPENED.**
- **WHETHER THERE IS LEAKAGE AT THE CONNECTIONS OF THE CONDUCTS.**
- **WHETHER THE WIRES ARE TIGHTLY CONNECTED.**
- **WHETHER THE POWER IS SWITCHED ON.**
- **WHETHER THE INLET AND DRAIN HOSES ARE KNOTTED / KINKED.**
- **WHETHER ALL PACKING MATERIALS & PRINTED MATTER HAVE BEEN REMOVED FROM THE DISHWASHER.**

PLEASE KEEP THIS MANUAL FOR FUTURE REFERENCE

BAUMATIC LTD. - CONDITIONS OF GUARANTEE.

Dear Customer,

The conditions of guarantee which apply to your Baumatic appliance are as follows: This product is guaranteed for 12 months from the date of original purchase.
Baumatic Ltd will repair any defect that arises due to faulty materials or workmanship free of charge during this period.

* In addition, your appliance is covered by a 5 year parts warranty. Baumatic Ltd will provide free of charge the parts required to repair the appliance, only if they are fitted by a Baumatic engineer, for any defect that arises due to faulty materials or workmanship within a period of 5 years from the original purchase date.

* An additional and annually renewable insurance scheme for labour is available should you wish to extend the warranty period.

Should any person other than an authorised representative of Baumatic Ltd interfere with the appliance, the policy is negated and Baumatic Ltd will be under no further liability.

The guarantee covers the appliance for normal domestic use only, unless otherwise stated.

Any claims made under the terms of the guarantee must be supported by the original invoice/bill of sale issued at the time of purchase.

This guarantee is transferable only with the written consent of Baumatic Ltd.

If the appliance fails and is considered either not repairable or uneconomical to repair between twelve months and five years from purchase date, a free of charge replacement will not be offered.

The guarantee for any replacement will only be for the remainder of the guarantee on the original product purchased.

This guarantee does not cover:

- Sinks and taps
- Failure to comply with the manufacturer's instructions for use.
- The replacement of cosmetic components or accessories.
- Accidental damage or wilful abuse.
- Subsequent loss or damage owing to the failure of the appliance or electrical supply.
- Incorrect installation.
- Losses caused by Acts of God, civil war, failure to obtain spare parts, strikes or lockouts.
- Filters, fuses, light bulbs, external hoses, damage to bodywork, paintwork, plastic items, covers, baskets, trays, shelves, burner bases, burner caps, decals, corrosion, rubber seals.

In the course of the work carried out it may be necessary to remove the appliance from its operating position. Whilst all reasonable care will be taken, Baumatic Ltd cannot accept responsibility for damage sustained to any property whatsoever in this process.

This guarantee is in addition to and does not diminish your statutory or legal rights.

Contacting Baumatic.

SALES	SERVICE	SPARES	TECHNICAL / ADVICE
TEL: 0118 933 6900	TEL: 0118 933 6911	TEL: 0118 933 6922	TEL: 0118 9336933
FAX: 0118 931 0035	FAX: 0118 986 9124	FAX: 0118 933 6942	FAX: 0118 9336942

For mainland UK and Northern Ireland, please contact one of the above numbers for further information or any other query you may have.

For ROI (Republic of Ireland), please contact one the numbers below:

TEL: 01 - 6266798 FAX: 01 - 6266634

Thank you for buying Baumatic.

* Applies to UK, Scotland, Wales & Northern Ireland only.(Republic of Ireland has 1 year labour and 1 year parts warranty only)

Thank you for buying Baumatic.

Baumatic Ltd

Make-up for your kitchen

Headquarters

Baumatic Ltd.
Baumatic Buildings,
6 Bennet Road,
Reading,
Berkshire
RG2 0QX, United Kingdom

Sales Telephone
+44 118 933 6900

Sales Fax
+44 118 931 0035

Service Telephone
+44 118 933 6911

Service Fax
+44 118 986 9124

Spares Telephone
+44 118 933 6922

Technical / Advice Telephone
+44 118 933 6933

E-mail:

sales@baumatic.co.uk

technical@baumatic.co.uk

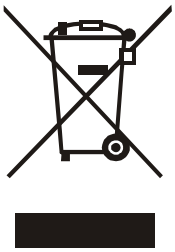

This appliance is marked according to the European Directive 2002/96/EC on Waste Electrical and Electronic Equipment(WEEE).
This guideline is the frame of a Europeanwide validity of return and recycling on Waste Electrical and Electronic Equipment.

Baumatic®

www.baumatic.com